FIXED-BIAS CIRCUIT

BJT DC BIASING

prepared by:

Gyro A. Madrona

Electronics Engineer

TOPIC OUTLINE

Fixed-Bias Circuit

- Base-Emitter Loop
- Collector-Emitter Loop
- Load Line Analysis

FIXED-BIAS CIRCUIT

Bipolar

"two polarities"

Bipolar Junction Transistor

BJT operation involves the movement of free **electrons** and **holes**

FIXED-BIAS CIRCUIT

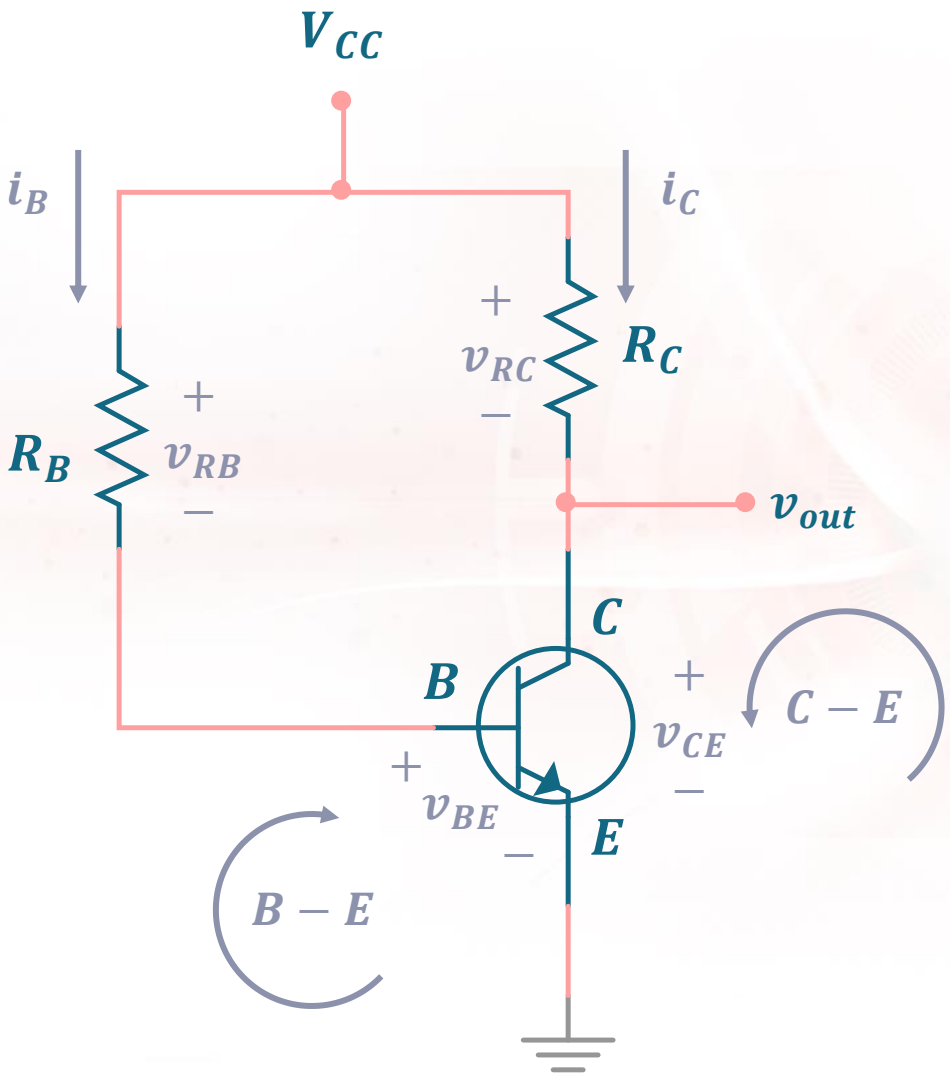

BASE-EMITTER LOOP

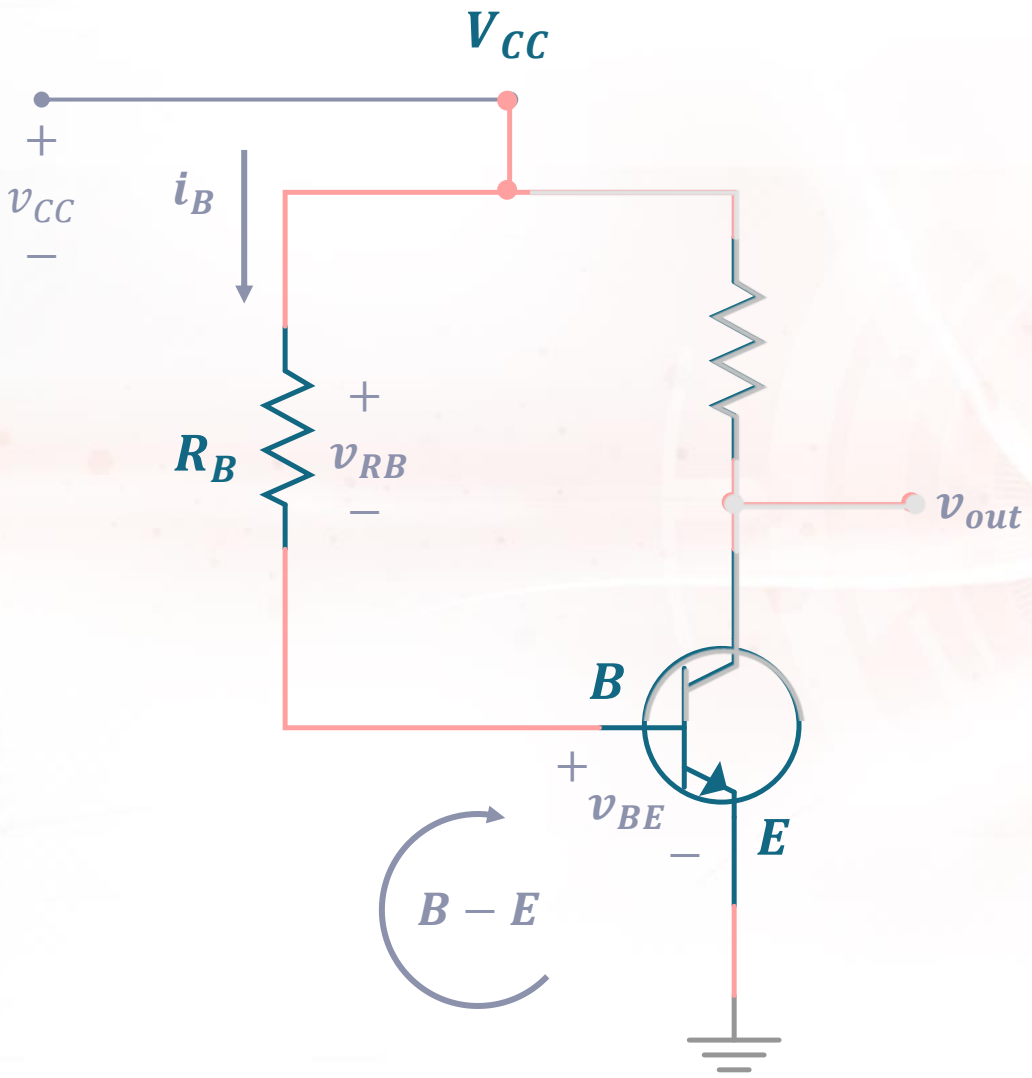

KVL @$B - E$,

$$-v_{CC} + v_{RB} + v_{BE} = 0$$

$$v_{RB} = v_{CC} - v_{BE}$$

$$i_B R_B = v_{CC} - v_{BE}$$

$$i_B = \frac{v_{CC} - v_{BE}}{R_B}$$

COLLECTOR-EMITTER LOOP

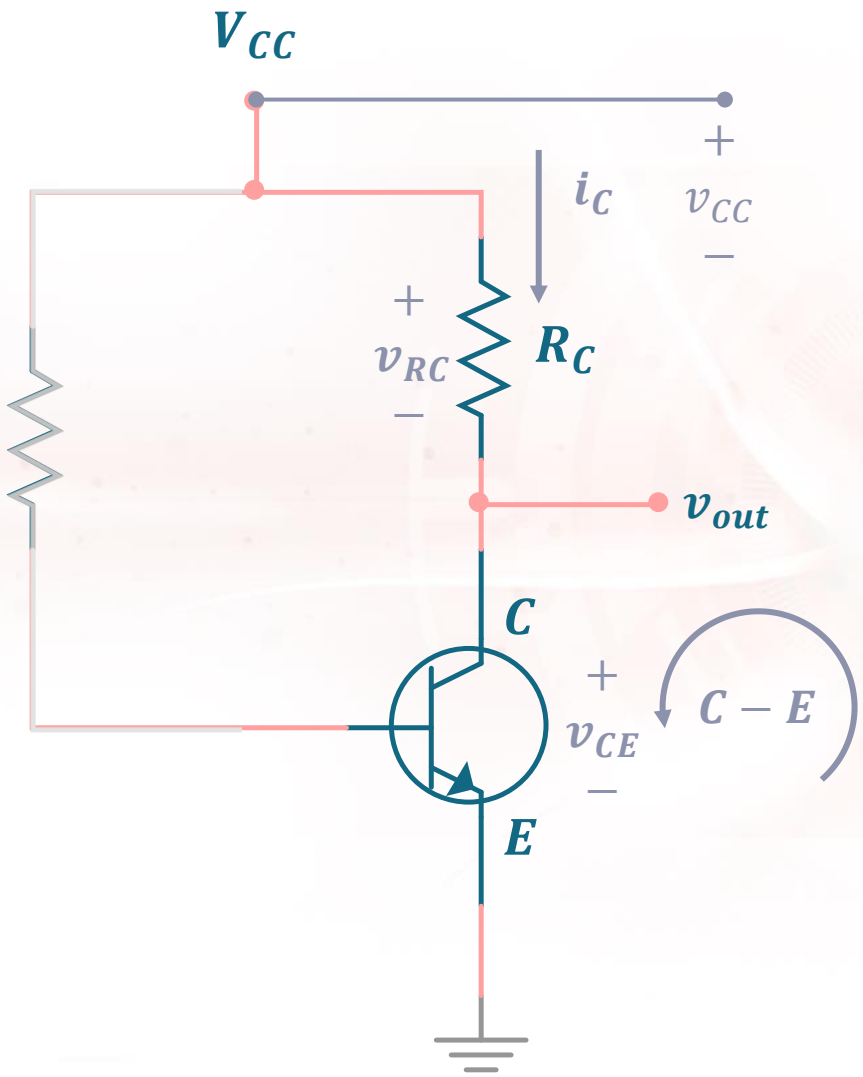

KVL @$C - E$,

$$-v_{CC} + v_{RC} + v_{CE} = 0$$

$$v_{CE} = v_{CC} - v_{RC}$$

$$v_{CE} = v_{CC} - i_C R_C$$

Determine the following for the **fixed-biasing** network :

- Base current, i_{BQ}
- Collector current, i_{CQ}
- Collector-Emitter voltage, v_{CEQ}
- Base voltage, v_B
- Collector voltage, v_C
- Base-Collector voltage, v_{BC}
- Load Line Analysis
  - Saturation current, $i_{C(sat)}$
  - Cutoff voltage, $v_{CE(cutoff)}$

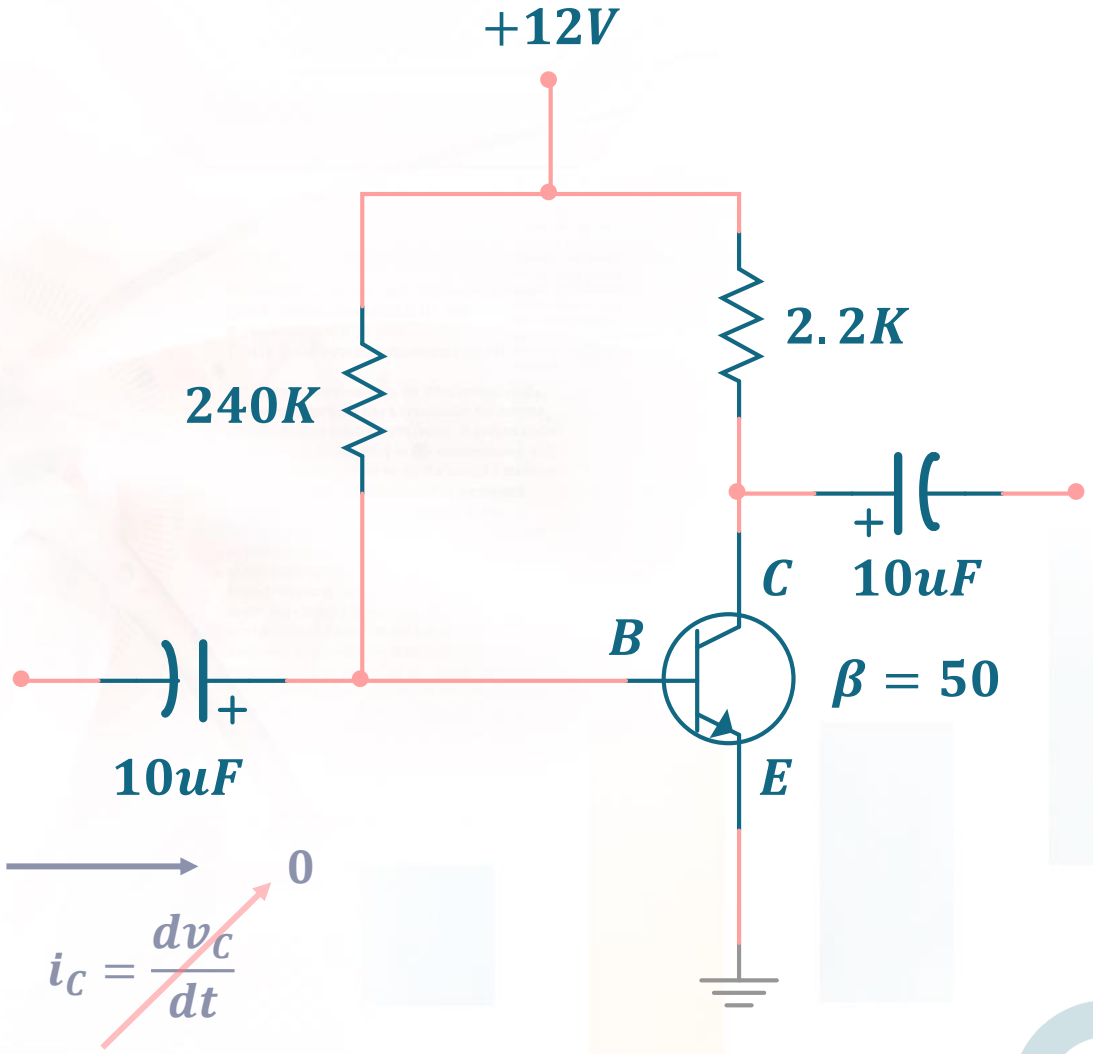

Node Analysis Method,

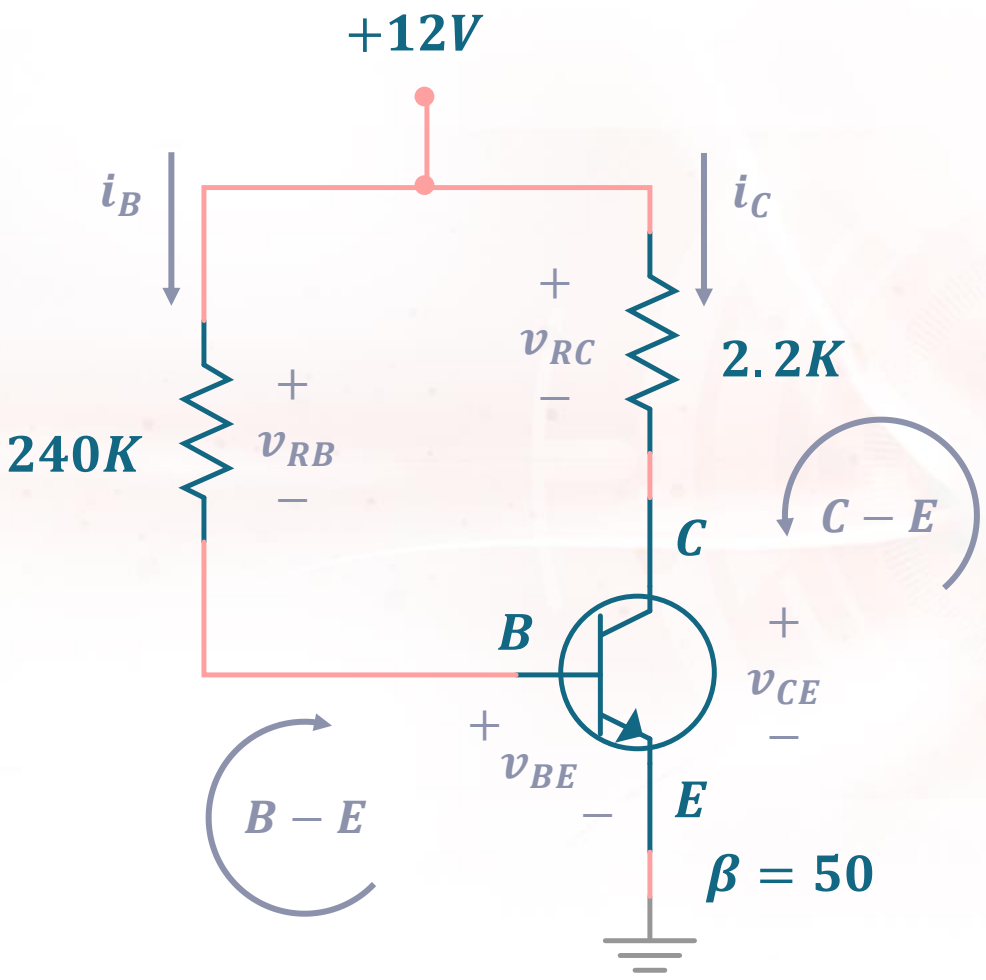

$$v_{BE} = v_B - v_E$$

$$v_B = v_{BE} + \cancel{v_E}^{\,0}$$

$$\boxed{v_B = 0.7\ V}$$

ans

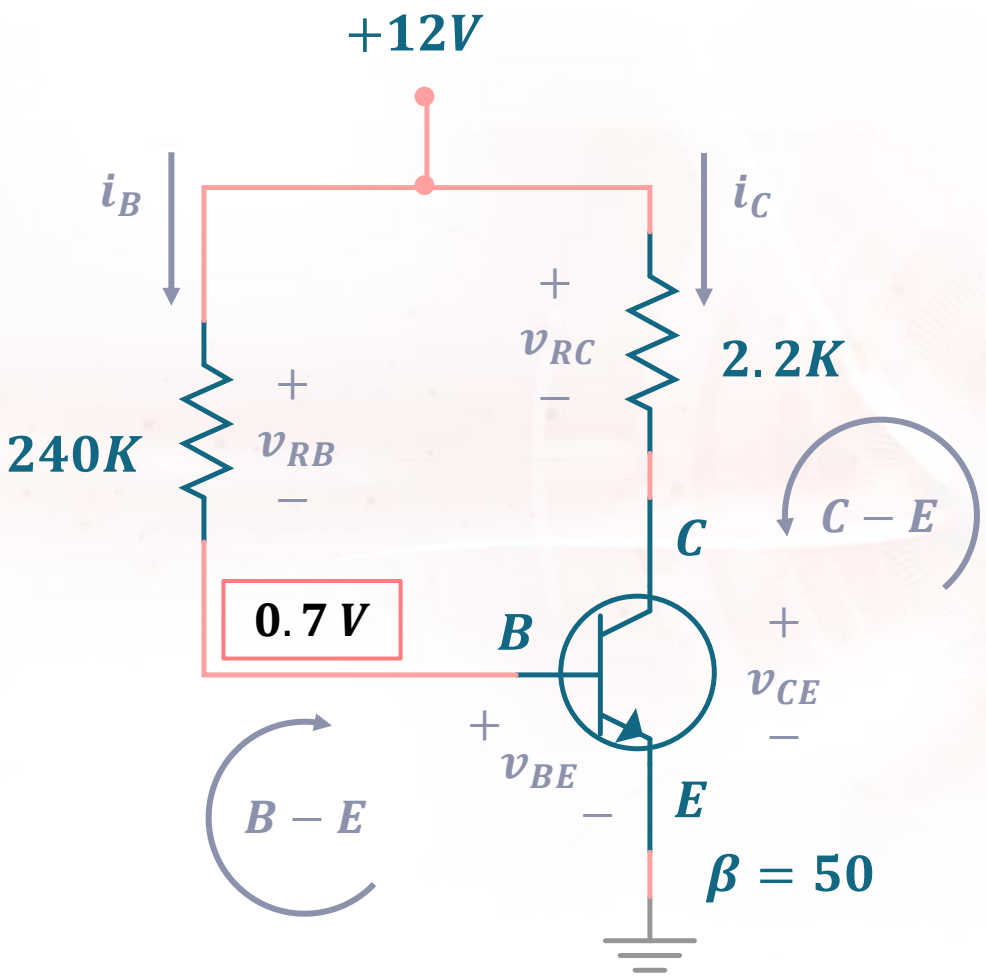

KVL @B − E,

$$-v_{CC} + v_{RB} + v_{BE} = 0$$

$$v_{RB} = v_{CC} - v_{BE}$$

$$i_B R_B = v_{CC} - v_{BE}$$

$$i_B = \frac{v_{CC} - v_{BE}}{R_B}$$

$$i_B = \frac{12 - 0.7}{240K}$$

$$\boxed{i_{BQ} = 47.08\ \mu A}$$

ans

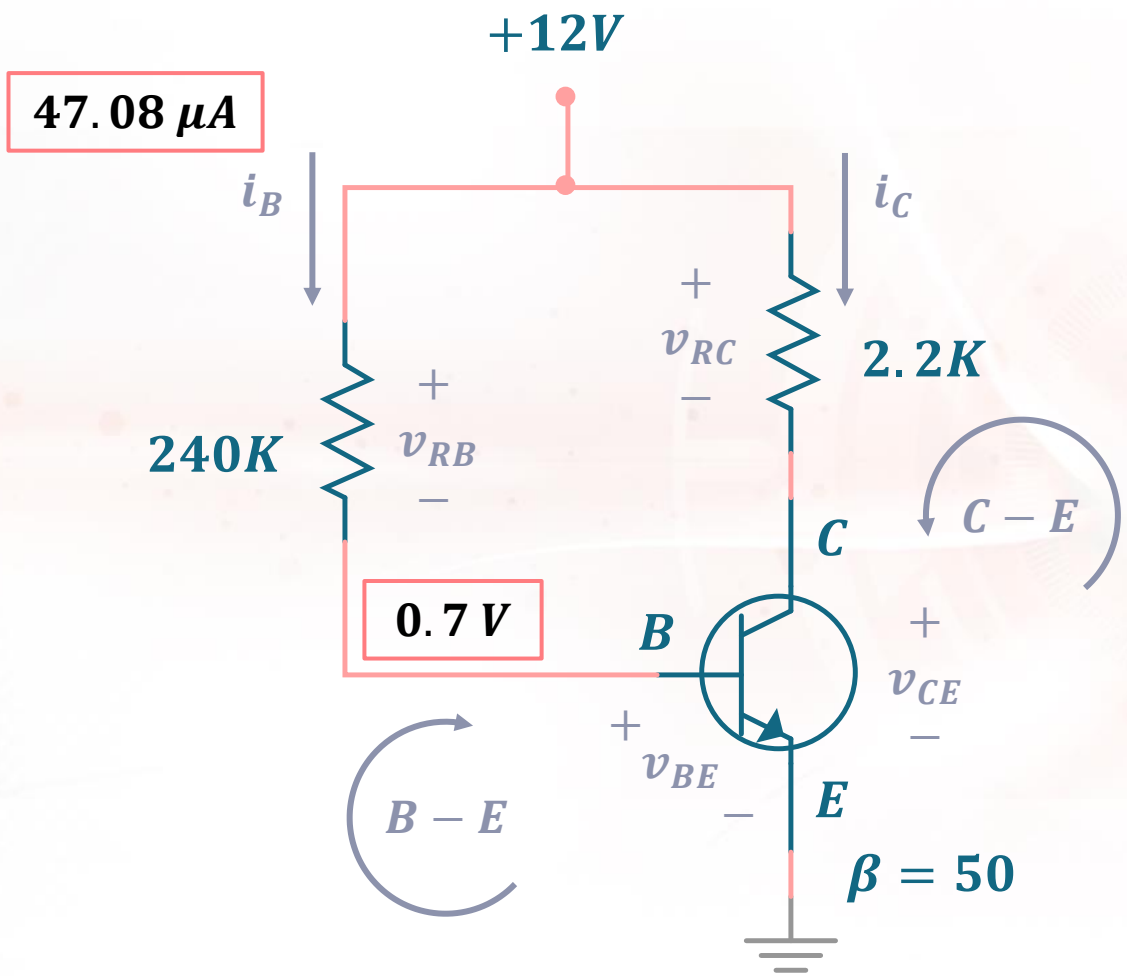

Current Gain,

$$i_C = \beta i_B$$

$$i_C = 50(47\ \mu A)$$

$$\boxed{i_{CQ} = 2.35\ mA}$$

ans

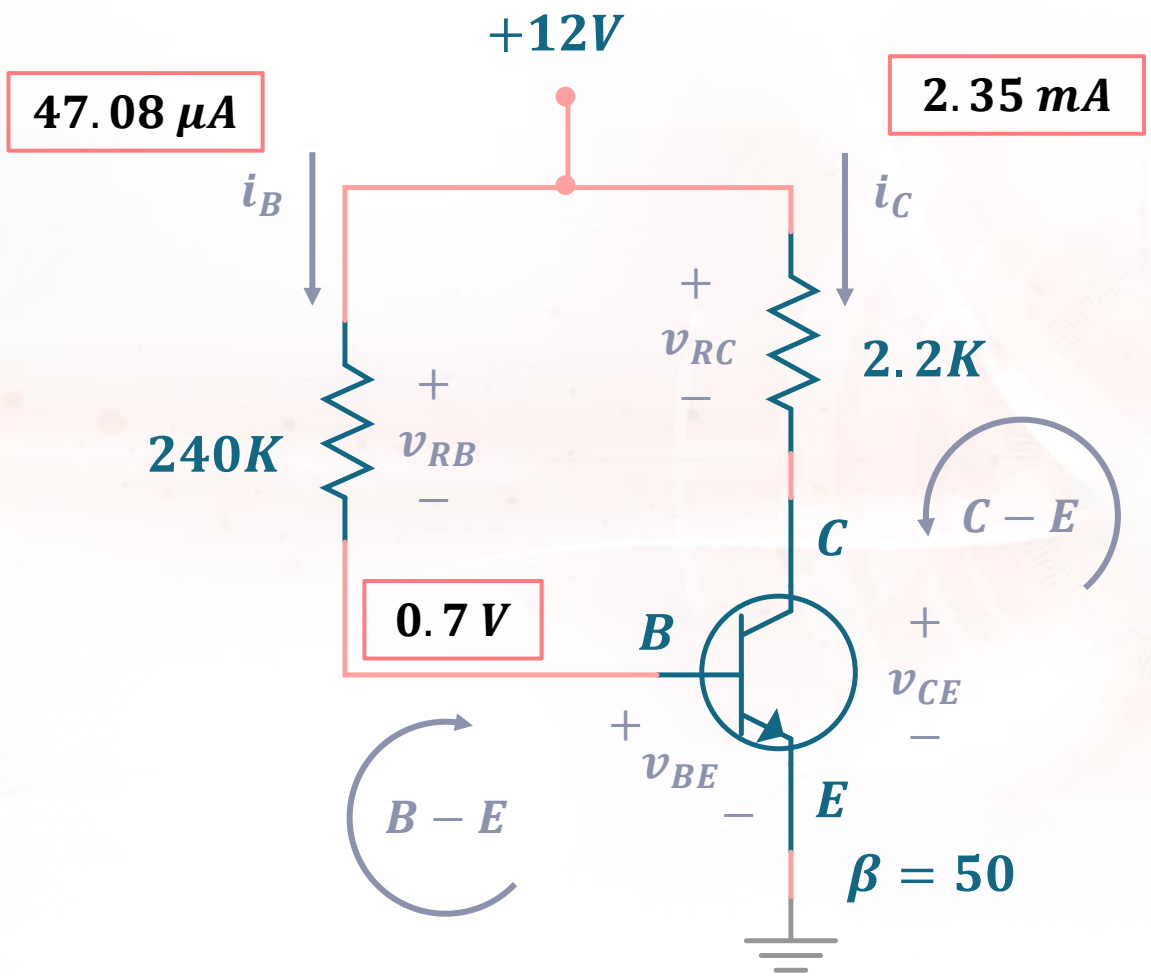

KVL @$C - E$,

$$-v_{CC} + v_{RC} + v_{CE} = 0$$

$$v_{CE} = v_{CC} - v_{RC}$$

$$v_{CE} = v_{CC} - i_C R_C$$

$$v_{CE} = 12 - 2.35\,mA(2.2K)$$

$$\boxed{v_{CEQ} = 6.83\,V}$$

ans

Node Analysis Method,

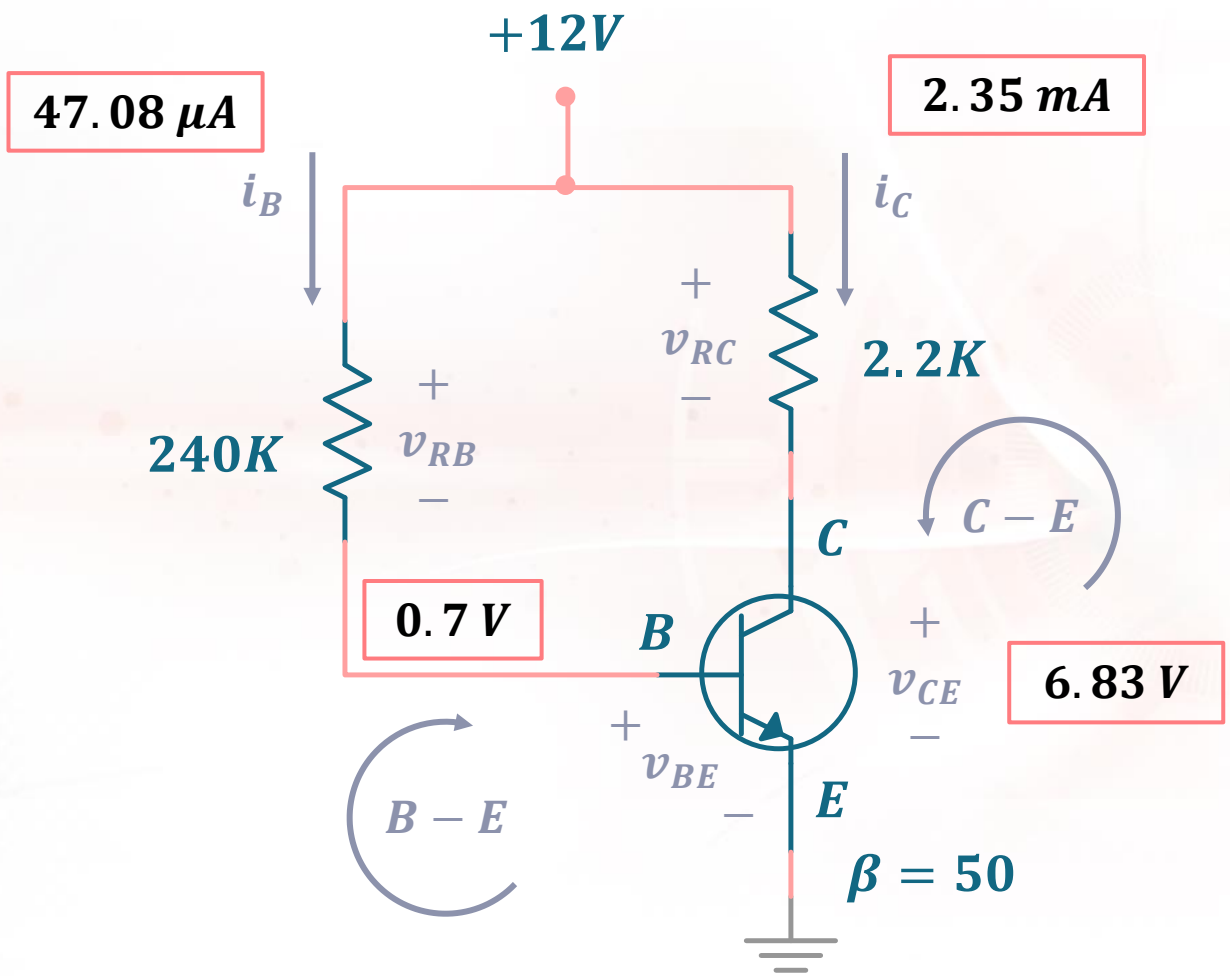

$$v_{CE} = v_C - v_E$$

$$v_C = v_{CE} + \cancel{v_E}^{\,0}$$

$$\boxed{v_C = 6.83\ V}$$

ans

Node Analysis Method,

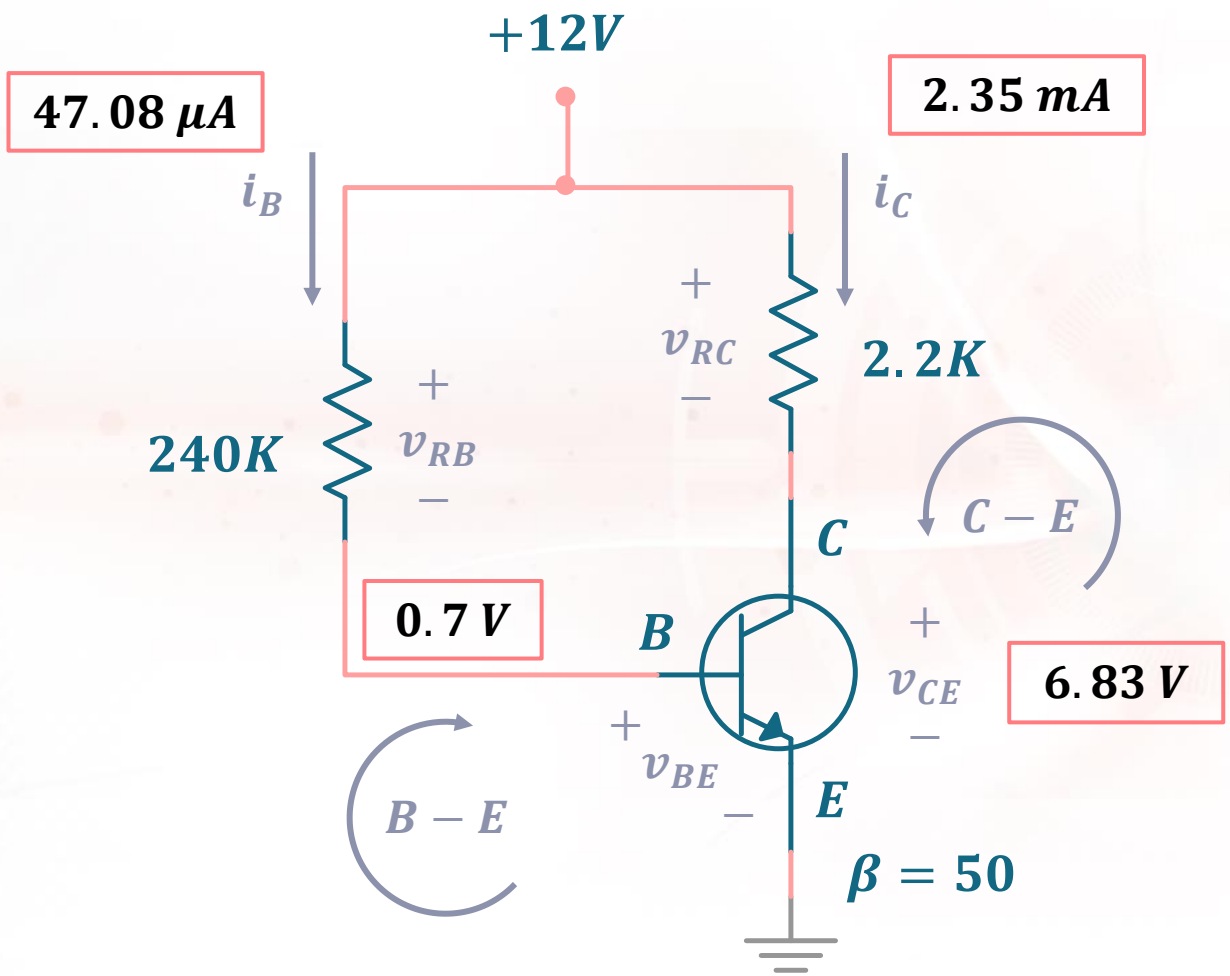

$$v_{BC} = v_B - v_C$$

$$v_{BC} = 0.7 - 6.83$$

$$\boxed{v_{BC} = -6.13\ V}$$

ans

Collector Characteristic Curve

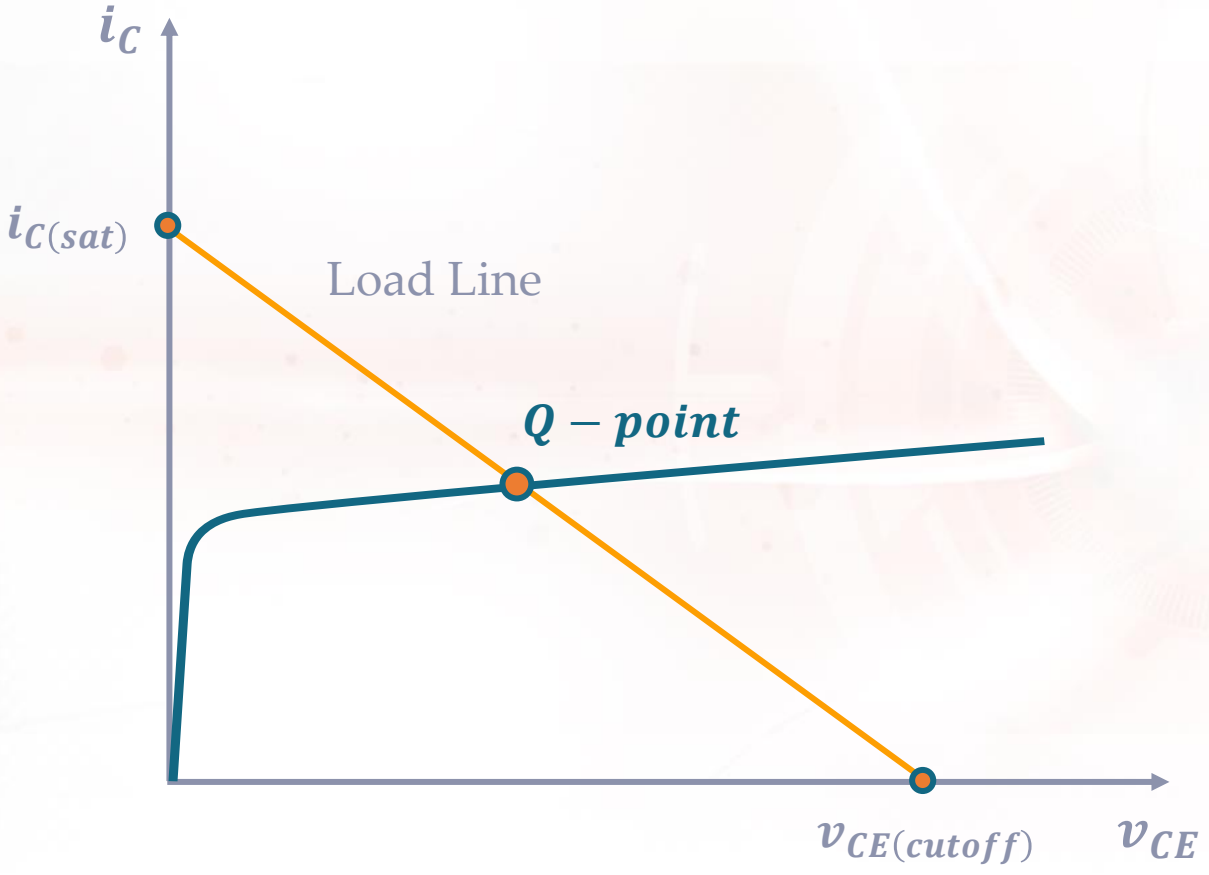

Saturation Point

the maximum possible current

$i_{C(sat)}|v_{CE} = 0$

Cutoff Point

the maximum possible collector-emitter voltage

$v_{CE(cutoff)}|i_C = 0$

Collector Characteristic Curve

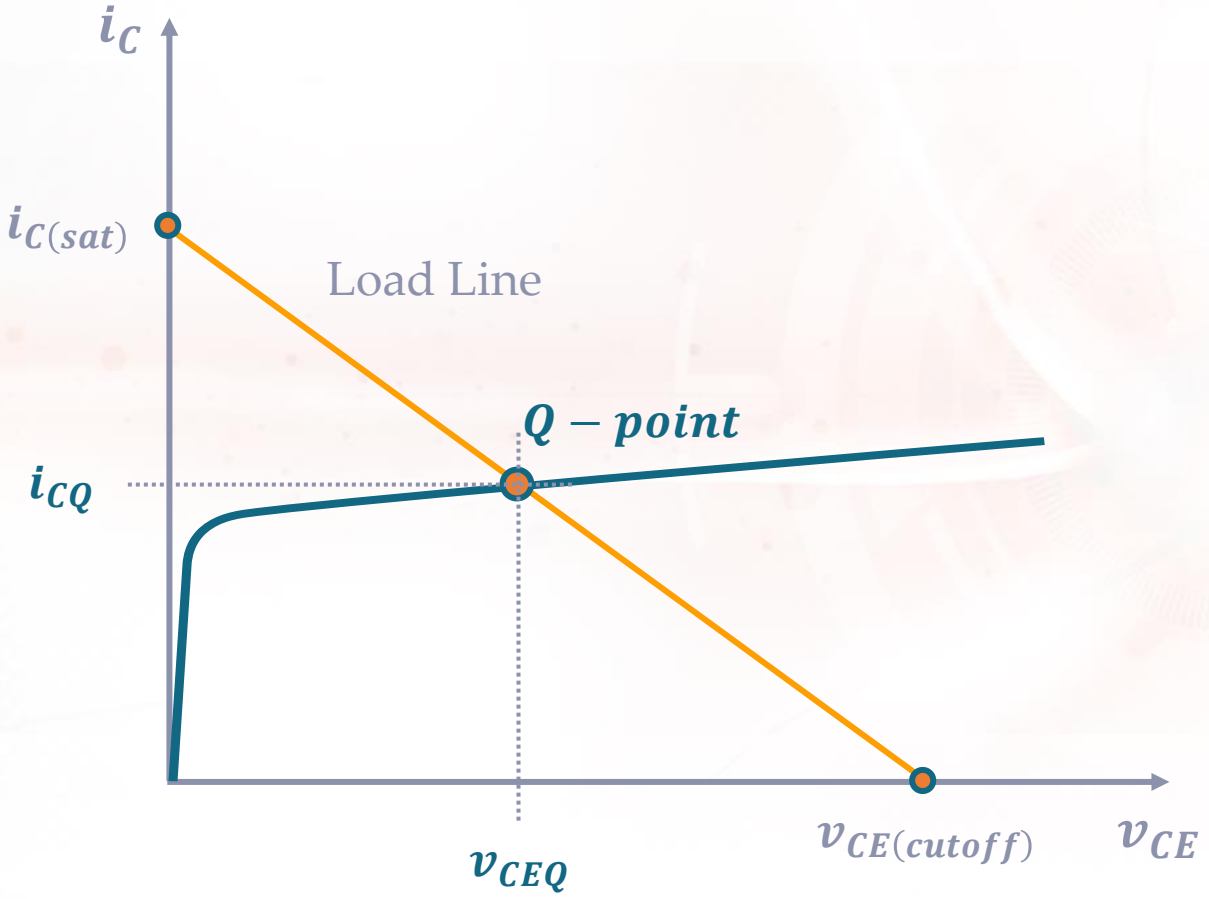

Quiescent Point (Q-point)

The steady-state DC **operating point**, characterized by specific value of collector current, $\boldsymbol{i_C}$ and collector-emitter voltage, $\boldsymbol{v_{CE}}$

SATURATION POINT

Collector Characteristic Curve

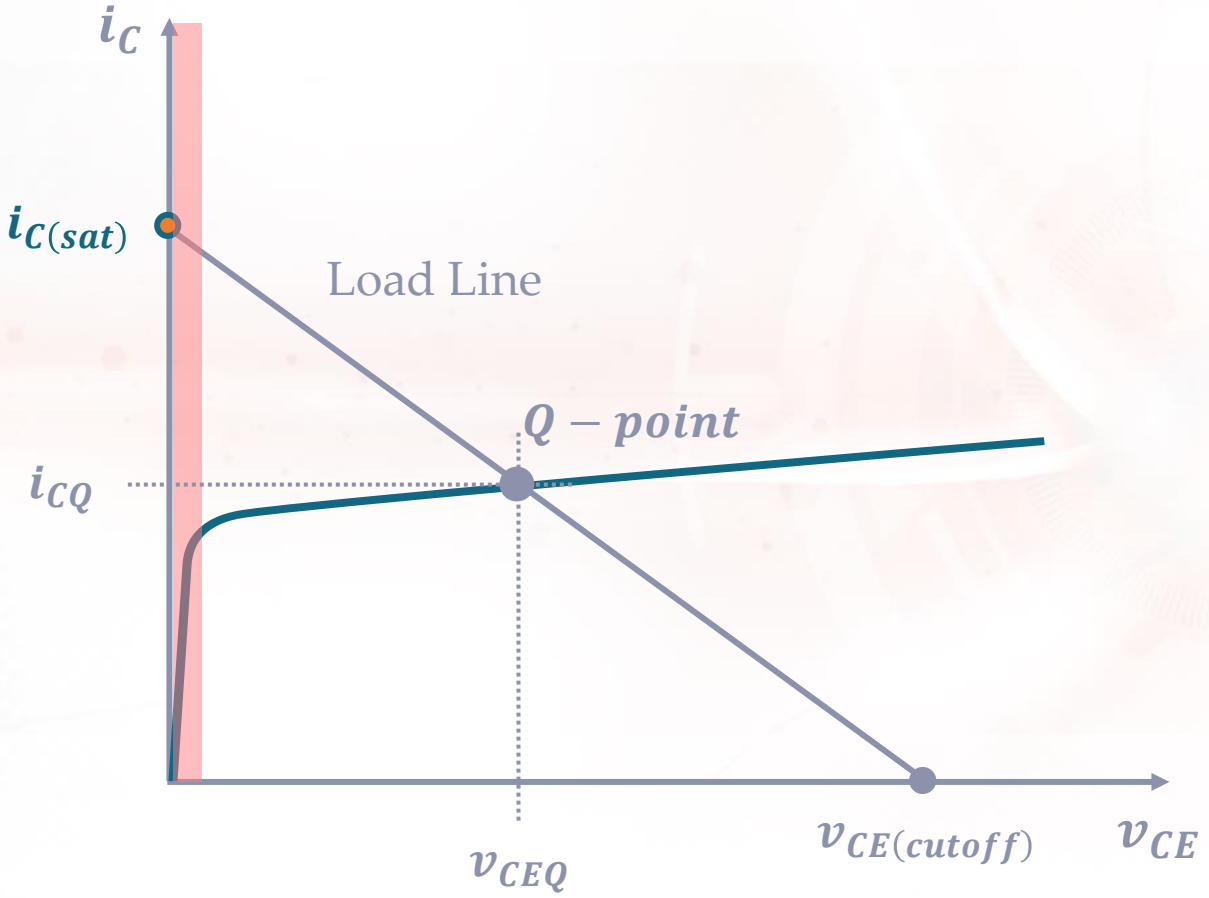

Mental **Short**

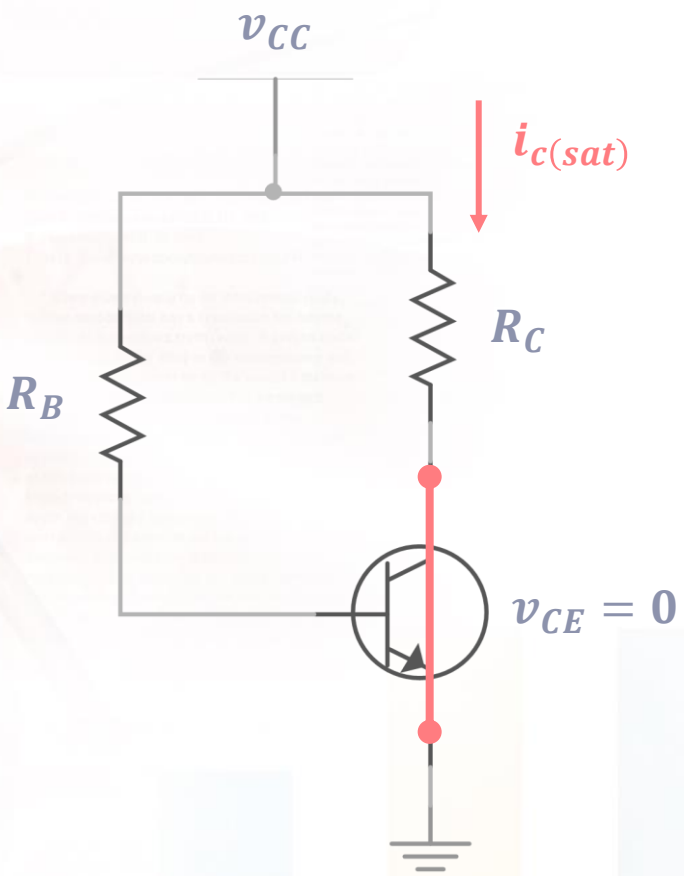

CUTOFF POINT

Collector Characteristic Curve

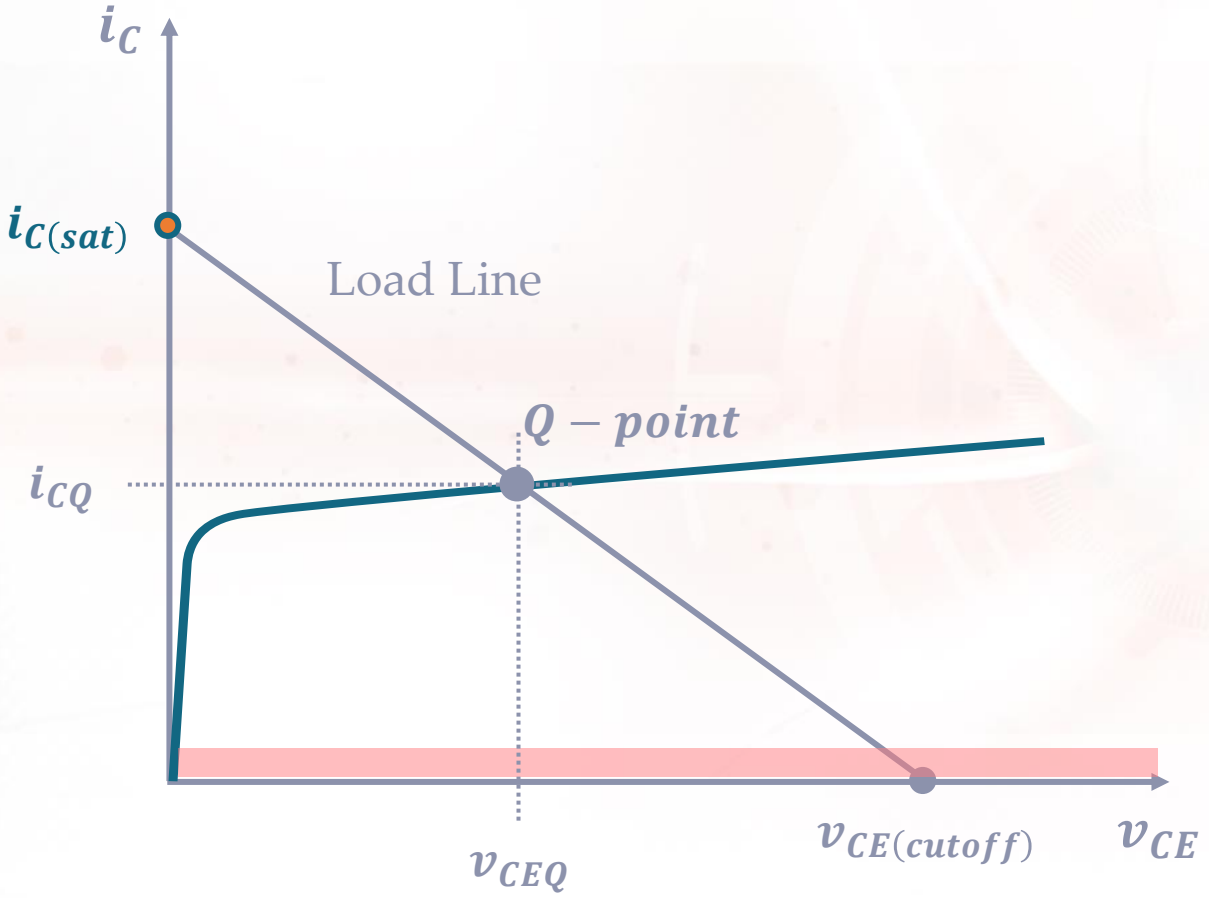

Mental **Open**

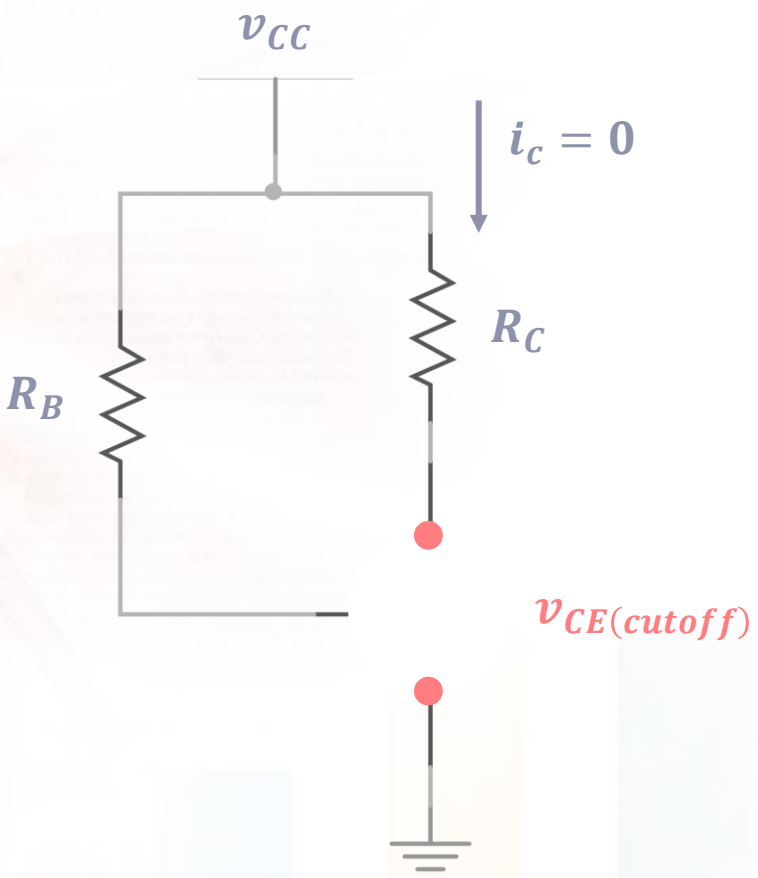

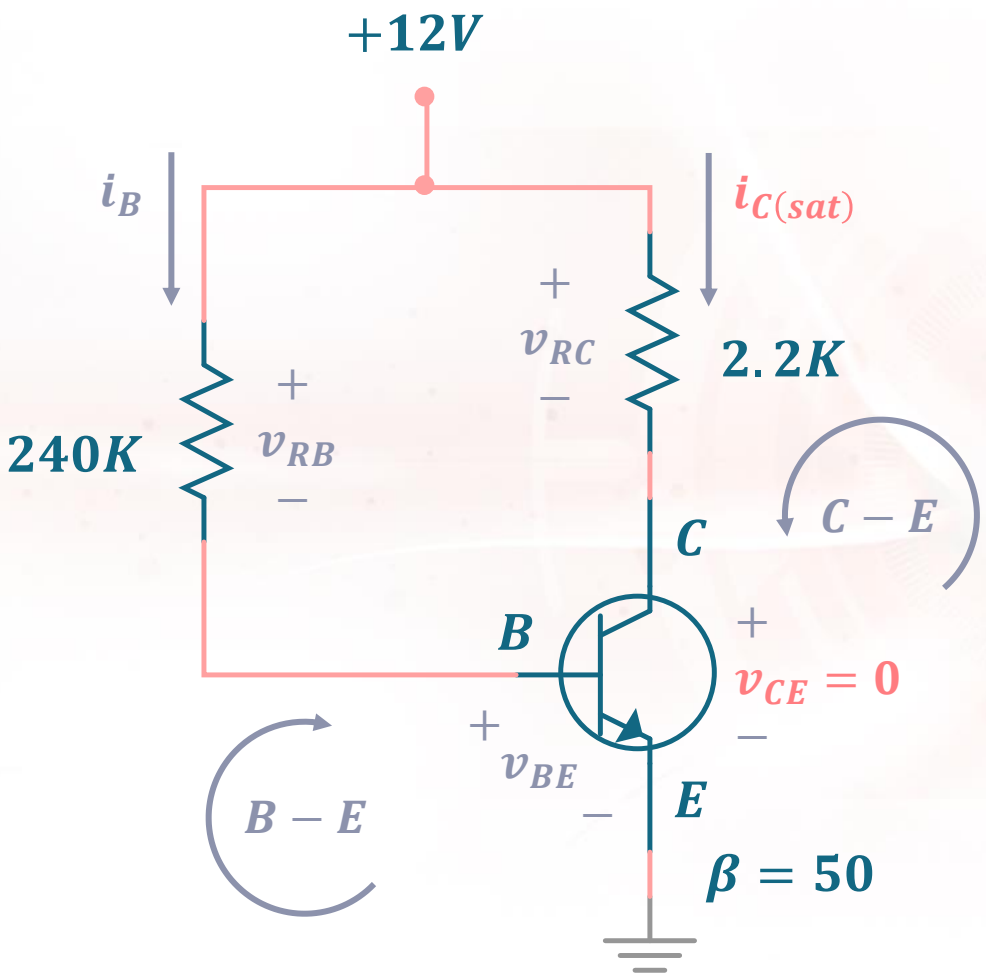

KVL @ $C - E$,

$$-v_{cc} + v_{RC} + \cancel{v_{CE}}^{\,0} = 0$$

$$v_{RC} = v_{CC}$$

$$i_C R_C = v_{CC}$$

$$i_C = \frac{v_{CC}}{R_C}$$

$$i_C = \frac{12}{2.2\ K}$$

$$\boxed{i_{C(sat)} = 5.45\ mA}$$

ans

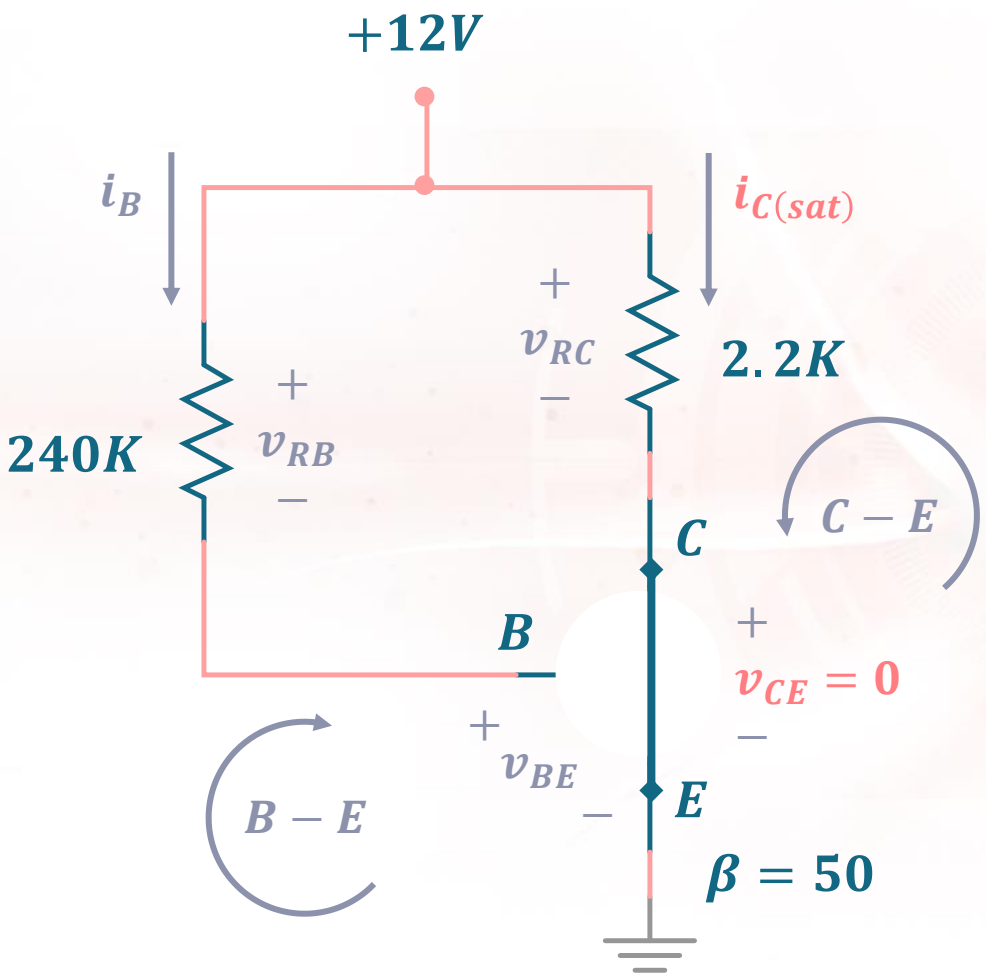

Mental Short,

$$i_{C(sat)} = \frac{v_{CC}}{R_C}$$

$$i_{C(sat)} = \frac{12}{2.2K}$$

$$\boxed{i_{C(sat)} = 5.45\ mA}$$

ans

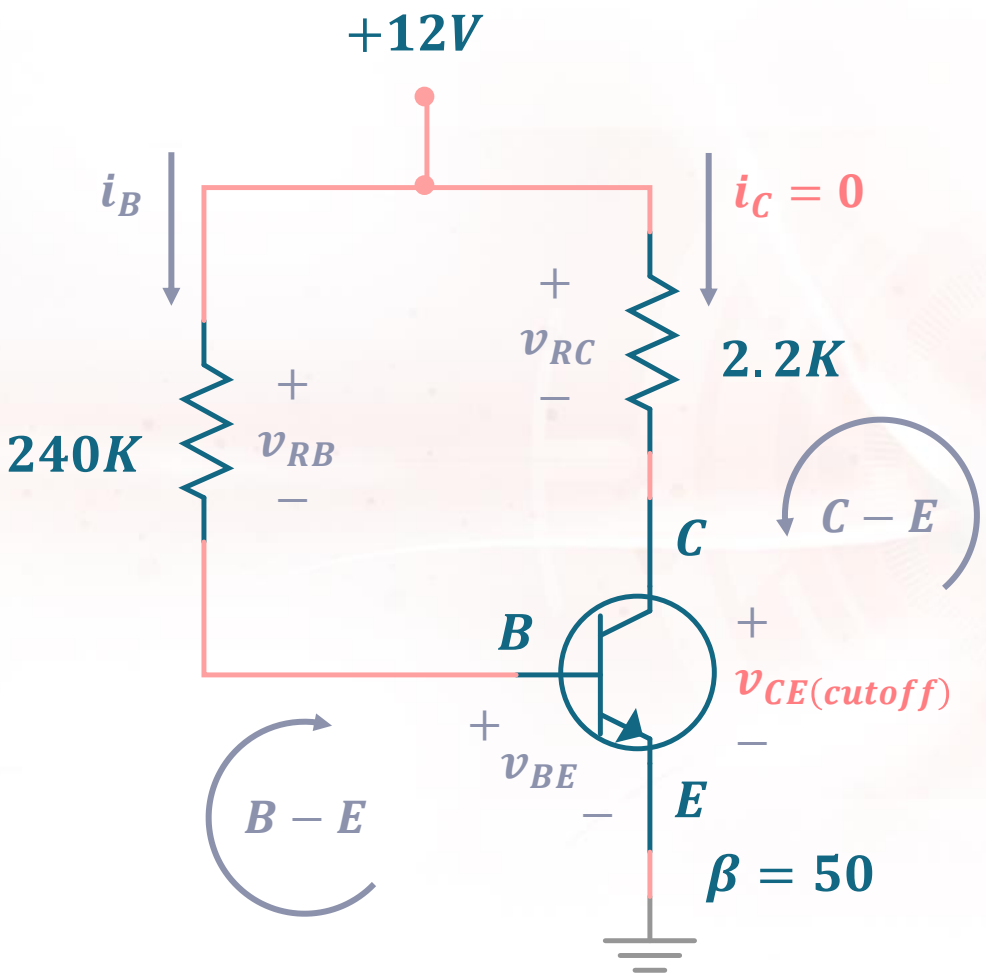

KVL @ $C - E$,

$$-v_{cc} + v_{RC} + v_{CE} = 0$$

$$v_{CE} = v_{CC} - v_{RC}$$

$$v_{CE} = v_{CC} - \cancel{i_C}^{\,0} R_C$$

$$\boxed{v_{CE(cutoff)} = 12\ V}$$

ans

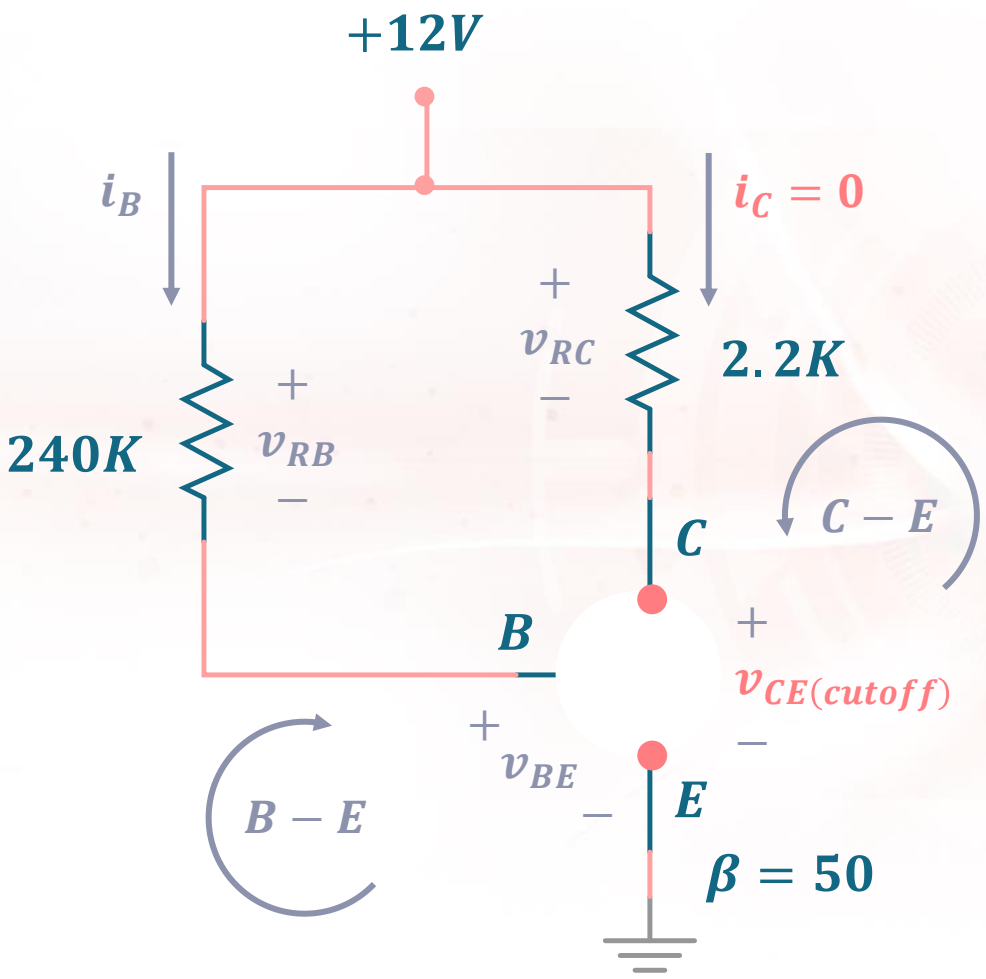

Mental Open,

$$v_{C(cutoff)} = v_{CC}$$

$$\boxed{v_{CE(cutoff)} = 12\ V}$$

ans

LOAD LINE ANALYSIS

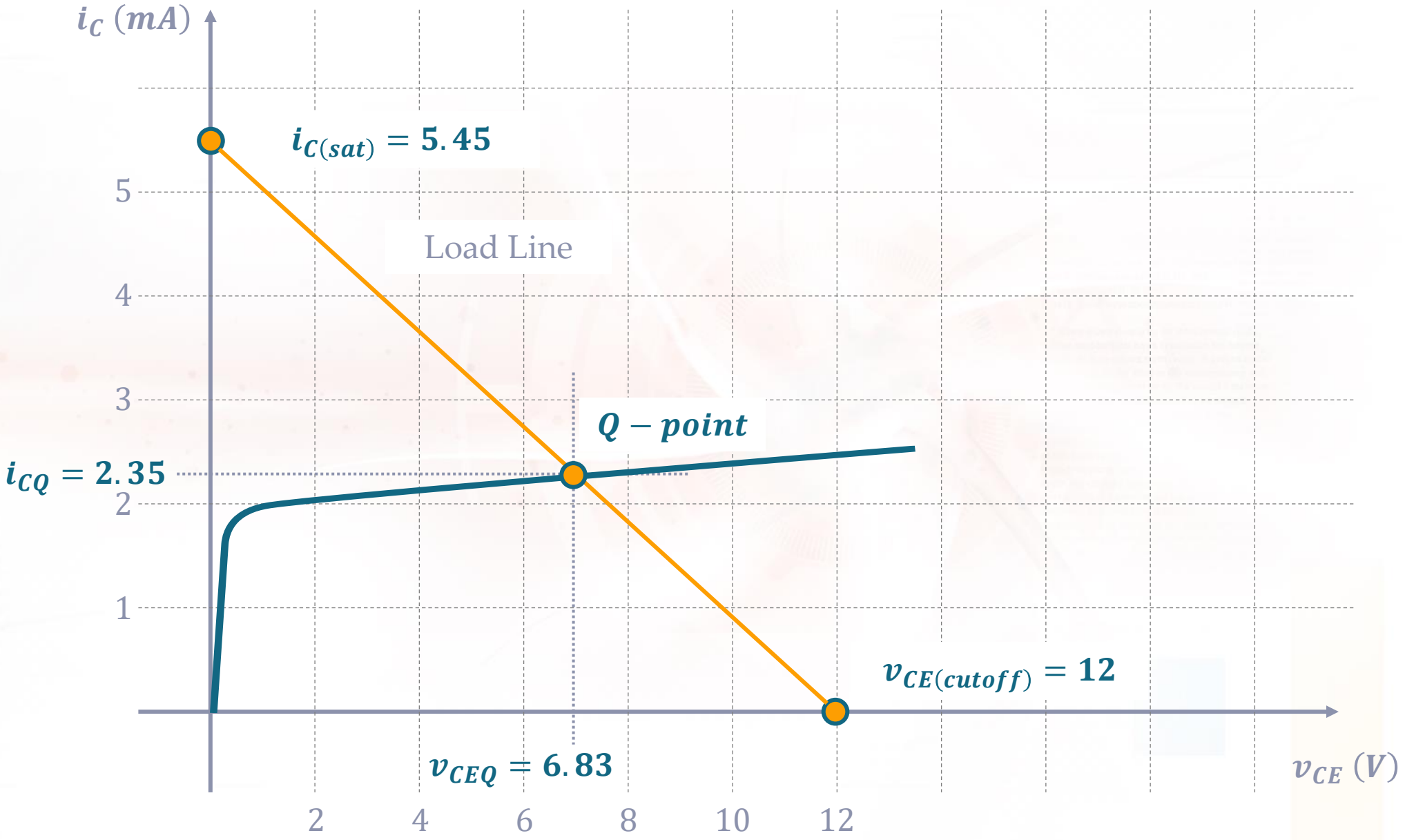

LABORATORY